Nov. 28, 1944. R. D. CONBOY 2,363,645

CIGAR LIGHTER

Filed July 8, 1938

Fig. 1

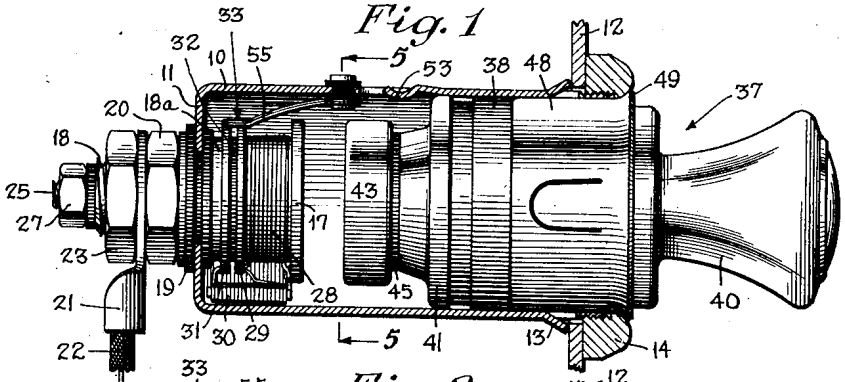

Fig. 2

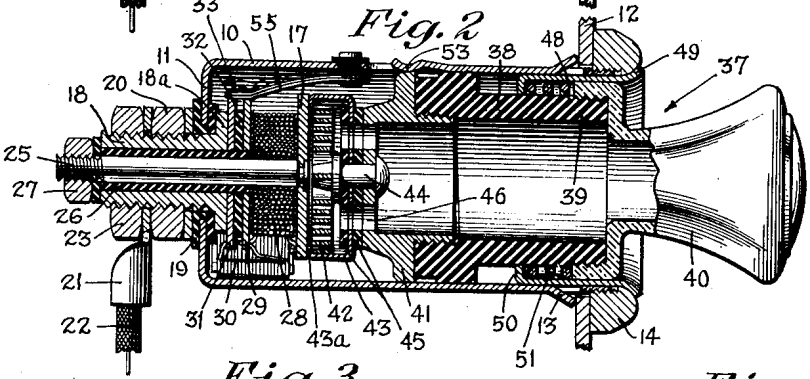

Fig. 3

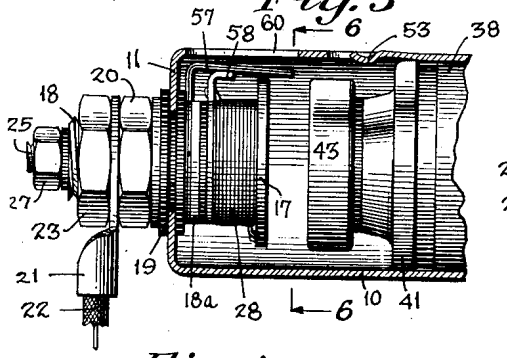

Fig. 4

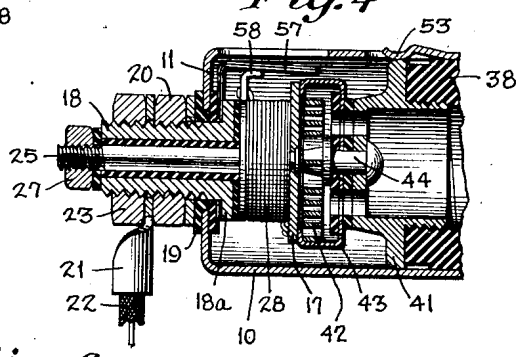

Fig. 5

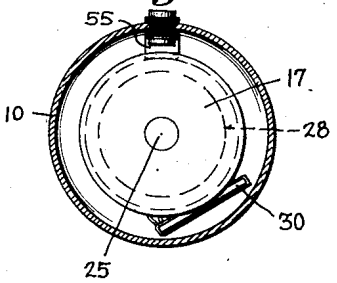

Fig. 6

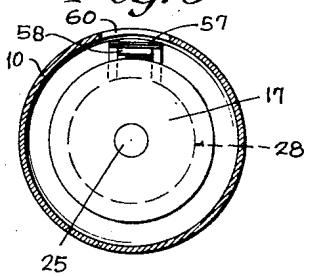

INVENTOR
Russell D. Conboy
BY
ATTORNEY

Patented Nov. 28, 1944 2,363,645

UNITED STATES PATENT OFFICE

2,363,645

CIGAR LIGHTER

Russell D. Conboy, Waterbury, Conn., assignor to Automatic Devices Corporation, Bridgeport, Conn., a corporation of Connecticut

Application July 8, 1938, Serial No. 218,074

21 Claims. (Cl. 219—32)

This invention relates to cigar lighters, and, more particularly, to cigar lighters of the type in which the circuit to the heating element is opened upon the heating element reaching a predetermined desired heat.

In prior constructions of cigar lighters of this type, it has been proposed to use hooked latches or the like to hold the heating element in closed-circuit position, and upon the heating element attaining its predetermined desired heat, have the latches release and thereby open the circuit to the heating element. The latch members had to be rugged enough to hold the circuit closed against accidental release thereof and required a predetermined movement before they could be disengaged from their cooperating elements to open the circuit. The specific movement of the latch was, of course, critical in order to insure operation, and careful adjustments in assembling the device were required.

An object of the present invention is to provide a cigar lighter in which the circuit is maintained closed without the use of latches until the heating element has reached a predetermined desired heat, at which time the circuit is opened. This is accomplished by using a magnetic contact to energize the heating element carried by the igniting unit, which igniting unit is held in closed-circuit position by the magnetism of the contact until the heating element has reached its predetermined desired heat. When this occurs, the magnetism of the contact is reduced to a point wherein it no longer is capable of holding the igniting unit in engagement therewith and the igniting unit is moved to open-circuit position.

Accordingly, a contact is disposed in the base of the holder, and comprises a flat plate which is magnetized by an electromagnet. The electromagnet has one terminal thereof connected to the source of energy, and the other terminal connected to the contact plate. Upon movement of the igniting unit into engagement with the contact plate, a circuit is completed through the magnet from the contact plate, through the heating element, to the holding device, which circuit energizes both the electromagnet and the heating coil.

The magnetism in one form of the invention is decreased by including a resistor in series with the electromagnet and providing a switch means for normally shunting out the resistance, and, upon the heating element acquiring its desired heat, opening the switch to include the resistance in the circuit, thereby decreasing the current and consequently the magnetism of the contact.

In another form of the invention, the magnetic contact is energized by an electromagnet, which has one terminal connected to the contact plate and the other terminal connected by a normally closed heat-responsive switch to a source of energy.

When the igniting unit is moved to closed-circuit position, the circuit will be completed from the contact plate, through the heating element, to the holder, which will energize both the electromagnet and the heating coil. Upon the heating coil reaching its predetermined desired heat, the heat-responsive switch will open the circuit to the electromagnet and the magnetism of the contact will be decreased so that the igniting unit is no longer held in engagement therewith.

A feature of the invention resides in the electric circuits for controlling the energization of the electromagnet and the heating coil.

According to the present invention, the circuit is so arranged that arcing between the contact plate and contact on the igniting unit is eliminated by the current being reduced prior to the separation of these contacts. This is an important feature, inasmuch as the surface engagement between the magnetic contact and the cooperating contact on the igniting unit must be maintained in order to get a maximum holding action and, therefore, cannot be marred by pits or other irregularities which would be formed by arcing.

The novel controlling circuit for the heating element also provides a safety feature, inasmuch as it will prevent the heating coil from becoming overheated should it be inadvertently maintained in closed-circuit position on the holder. In the first form of the invention described, the resistance added to the circuit will be sufficient to decrease the current passing through the heating element to that value which will maintain the heating coil at a safe value. In the second-described form of the invention, the circuit will be opened at the heat-responsive switch so that the energization of the heating element will cease on actuation of the switch

Other features and advantages of the invention will be apparent from the specification and claims when considered in connection with the drawing, in which:

Figure 1 shows a view of one form of the invention with the holder in section with the igniting unit in open-circuit position.

Fig. 2 is a longitudinal section of the holder

and igniting unit in Fig. 1, with the igniting unit in closed-circuit position.

Fig. 3 is a fragmentary view showing another form of the invention with the holding device in section, with the igniting unit in open-circuit position.

Fig. 4 is a view similar to Fig. 3, with the igniting unit and holding device in longitudinal section, with the igniting unit in closed-circuit position.

Fig. 5 is a sectional view, taken along line 5—5 of Fig. 1.

Fig. 6 is a sectional view, taken along line 6—6 of Fig. 3.

As shown in the drawing, the cigar lighter comprises a tubular sheet metal holder 10 having a rear wall 11 extending transversely of the holder. The holder is adapted to be mounted on and grounded to a dashboard or other support 12, and is provided with tangs 13 adjacent its open end, which are adapted to engage the back of the dashboard. A collar 14 is threaded on the open end of the tube, and engages the front face of the dashboard 12 and draws the tangs 13 into firm engagement with the back of the dashboard, thereby forming a good ground connection and a rigid mounting for the holder.

According to the present invention, a contact is mounted on the holding device and maintains the circuit closed until the cigar lighter has reached its desired predetermined heat without the use of latches. In the preferred form of the invention, a flat magnetic contact 17 is disposed in the base of the holder and is adapted to hold the circuit closed by its magnetic pull on the contact cooperating therewith.

In mounting the contact in the holder, a conductor sleeve 18 is disposed in a central aperture in the rear wall 11 of the holder 10, and is insulated therefrom by insulation 19. The sleeve has a flange 18*a* which engages the insulation on the inside of the rear wall 11, and is threaded on its outer surface to receive a nut 20 which is threaded thereon and clamps the sleeve in place in the central aperture in the rear wall.

The conductor sleeve is connected to a suitable source of energy, as by a connector lug 21, secured to a conductor 22, leading to one terminal of the source of energy. The connector lug is secured in good electrical engagement with the conductor sleeve by a nut 23 threaded on the extension of the sleeve.

The magnetic contact is mounted in the base of the holder and is electrically insulated therefrom and from the conductor sleeve. The contact and associated elements are mounted on a bolt 25 having a reduced portion extending through the magnetic contact and secured thereto as by being headed over. The bolt is surrounded by an insulating sleeve 26 and is disposed within the conductor sleeve so as to be insulated therefrom and have its threaded end project from one end thereof. The bolt is locked in place by a nut 27 and threaded on the projecting end thereof.

The contact 17 is preferably magnetized by an electromagnet coil 28 surrounding the bolt 25 adjacent its connection with the contact 17, and electrically insulated therefrom. The coil is of such design that it will create a strong magnetic pull in the contact plate 17 upon being energized from a suitable source of energy, as by having one terminal thereof connected to a contact member 29 which is in turn connected to the source of energy, while the other terminal is connected to the undersurface of the magnetic contact. When the magnet coil is energized, it will hold the circuit closed.

The holder is adapted to have an igniting unit 37 movably mounted therein and completely removable therefrom for use. The igniting unit illustrated comprises a sleeve of insulating material 38 slidably mounted within the bore of the holder and is provided with a reduced portion 39 to which is threaded a translucent handle 40. The other end of the sleeve of insulating material has a conducting cap 41 secured thereto by threaded engagement therewith. The conducting cap carries a heating element 42 in the form of a flat spiral of resistance wire positioned within a contact cup 43. One end of the heating element is secured to a contact cup, which is insulatedly mounted by insulation 45, on the conducting cap, and the other end is secured to a central stud 44 which clamps the contact cup in place on the conductor cap and electrically connects the inner end of the heating coil to the conducting cap.

The conducting cap, insulation and contact cup are provided with aligned apertures 46 which will permit the light, emanating from the heating element when the latter has become incandescent, to impinge on the translucent handle which will glow and give an indication that the heating element has acquired its desired heat.

The igniting unit is normally held in open-circuit position on the holder by means of a friction sleeve 48 having an outwardly flared flange 49 engaging the collar 14 to limit its inward movement. The inner end of the sleeve is provided with an inturned flange 50 adapted to slidably fit around the reduced portion 39 of the sleeve of insulating material and form an abutment for an ejector spring 51 surrounding the reduced portion of the sleeve. The other end of the spring engages the end of the handle. The spring and cooperating friction sleeve normally hold the igniting unit in open-circuit position, but will permit the igniting unit to move inwardly upon pressure on the handle against the action of the spring to move the heating element into a closed-circuit energizing position in the holder. When the heating coil is moved to this position, the contact cup will engage the magnetic contact 17, and the conducting cap will engage a resilient contact 53 lanced from the holder and will complete the energizing circuit for both the electromagnet and the heating element.

The energizing circuit will extend from the conductor 22, through the conducting sleeve 18, through the switch, to one terminal of the magnet, through the magnet to the contact plate 17, to the contact cup 43, through the heating element, to the conducting cap, to the holder, and to ground.

As soon as the energizing circuit is closed, the contact 17 will become magnetized and will hold the cooperating contact in closed-circuit position. The contact cup 43 is made of a material which will be readily attracted by the contact 17 when magnetized and, as will be seen in Fig. 2, is provided with an inturned flange 43*a* to provide a sufficient area in contact with the contact 17 to hold the igniting unit in closed-circuit position.

According to the present invention, when the heating element acquires its predetermined heat, the magnetization of the contact is decreased so that it no longer holds the igniting unit in closed-circuit position.

In one form of the invention, shown in Figs. 1, 2 and 5, the magnetic pull of the contact is de-

creased by providing a resistor **30** which is positioned in the holder and has one terminal connected to the contact member **29** and the other terminal connected to a closely adjacent contact member **31** which is electrically connected to the flange **18a** of the conductor sleeve, but insulated from the contact member **29** by insulation **32**. This places the resistor in the energizing circuit for the magnet coil and in series therewith.

In the normal operation of the device, the resistor is shunted out of the energizing circuit and rendered inoperative by a switch means **33** which becomes operative to remove the shunt and insert the resistor in series with the magnet to decrease the current passing therethrough at the time when the heating element has reached its desired heat and the magnetic pull of the contact is to be decreased. The shunting switch in this form of the invention comprises a heat-responsive switch **55** of bimetallic material insulatedly mounted on the holder in heat-receiving relation with the heating element and extending to a position in which it normally engages the two contact members **29** and **31** to shunt the resistor out of the circuit.

When the heating coil reaches a predetermined heat, the switch will become heated and will flex to the dotted position shown in Fig. 2 and will remove the shunt around the resistance, which will now be included in the circuit in series with the magnet coil, and decrease the current in the magnet. The magnetic pull of the contact plate **17**, resulting from the magnet coil, is dependent upon the current in the magnet, and, when the current is decreased, the pull of the contact will be decreased to such an extent that the ejector spring can move the igniter unit into open-circuit position.

As the current in the circuit is reduced before the contacts **17** and **43** are separated, arcing between these contacts will be practically eliminated.

The heating element in the form of the invention shown in Figs. 1, 2 and 5 is protected against burning out should the igniting unit be inadvertently held in closed-circuit position after the switch has been opened and the magnetism of the contact reduced, as the current passing through the circuit, with the resistance in series with the magnet coil and heating element, will be reduced to a value which will not injure the heating element.

In the form of the invention shown in Figs. 3, 4 and 6, the magnetic pull of the contact **17** is reduced to release the cooperating contact by opening the energizing circuit to the magnet coil. This is accomplished by a bimetallic switch member **57** clamped between a flange **18a** of the conductor sleeve and the insulation along the inner surface of the wall **11** and extending into heat-receiving relation with the heating coil when the latter is in closed-circuit position. The heat-responsive switch normally engages a contact member **58** to which one terminal of the electromagnet is secured, and connects that terminal of the electromagnet to the source of energy. The other terminal of the electromagnet is connected to the contact plate **17**. Upon the igniting unit being moved to closed-circuit position, the energizing circuit through the electromagnet and the heating coil is completed, as in the previously described form of the invention.

When the heating coil reaches its desired heat, the heat-responsive switch will have become heated and will flex and open the circuit at the contact member. With the circuit to the magnet coil opened, the magnetism in the contact plate **17** will be decreased to substantially zero, whereby the ejector spring can move the igniting unit into open-circuit position.

As the circuit is broken at the heat-responsive switch prior to the separation of the contact **17** and contact cup **43**, arcing between them as they separate is eliminated.

The heating element is protected against burning out, in this form of the invention, should the igniting unit be maintained in closed-circuit position after it has reached its predetermined desired heat, as the energizing circuit for the heating element will be opened at the heat-responsive switch.

If desired, the heat-responsive switch can be cooled by air circulated through vent openings **60** formed in the holding device.

Variations and modifications may be made within the scope of this invention and portions of the improvements may be used without others.

I claim:

1. In an electric cigar lighter, a holding device; an igniting unit including a heating element movably mounted on the holding device; means including an electric circuit for energizing the heating element when the igniting unit has been moved to closed-circuit position on the holding device; magnetic means energized when engaged by means carried by said igniting unit and forming a part of the circuit of the heating element when the igniting unit is moved to the said closed-circuit position on the holding device for holding the igniting unit in closed circuit position on the holding device by magnetic attraction between a portion of the igniting unit and a portion of the holding device; and automatically operable means for rendering the holding action of the magnetic means inoperative when the heating element has reached a predetermined desired heat.

2. In an electric cigar lighter, a holding device; an igniting unit including a heating element mounted on the holding device; means including an electric circuit for energizing the heating element when the igniting unit has been moved to closed-circuit position on the holding device; means for urging the igniting unit to open-circuit position; magnetic means for holding the igniting unit in closed-circuit position against said last-mentioned means by magnetic attraction between a portion of the igniting unit and a portion of the holding device until the heating element has reached a predetermined desired heat; and means for rendering the holding action of the magnetic means inoperative and releasing said igniting unit for movement by said urging means to said open-circuit position.

3. In an electrical cigar lighter, a holding device; an igniting unit including a heating element movably mounted on the holding device; a contact carried by said igniting unit; means including an electric circuit for energizing the heating element when the igniting unit is moved to a closed-circuit position on the holding device; and electromagnetic means on said holding device included in said circuit and operative when energized by movement of the igniting unit to said closed-circuit position to hold the igniting unit in the closed-circuit position by magnetic attraction between a portion of the igniting unit and a portion of the holding device upon the circuit being closed upon direct engagement of said electromagnetic means and contact carried by the

igniting unit and forming a part of said circuit, the closing of said circuit by the engagement of said electromagnetic means and contact simultaneously energizing the heating element and the electromagnetic means.

4. In an electric cigar lighter, a holding device; an igniting unit including a heating element movably mounted on the holding device; means including a electrical circuit for energizing the heating element; means for normally urging the igniting unit to open-circuit position; electromagnetic means for holding the igniting unit in closed-circuit position, said means comprising a contact of magnetizable material for cooperating with the igniting unit for holding the igniting unit in closed-circuit position and a coil disposed adjacent said contact for magnetizing the contact when energized by a circuit being closed therethrough; and means for opening the circuit to said electromagnetic means upon the heating element reaching a predetermined desired heat whereby the igniting unit is released and moved into open-circuit position.

5. In an electric cigar lighter, a holding device; an igniting unit including a heating element movably mounted on the holding device; means including an electrical circuit for energizing the heating element; means for normally urging the igniting unit to open-circuit position; electromagnetic means for holding the igniting unit in closed-circuit position, said means including a pole piece having a surface for engagement with the igniting unit and a coil for magnetizing the pole piece upon a circuit being closed therethrough; and means including a resistance adapted to be inserted in series with the electromagnetic means for decreasing the magnetism of the electromagnetic means upon the heating element reaching a predetermined desired heat whereby the igniting unit is released and moved into open-circuit position.

6. In an electric cigar lighter, a holding device; an igniting unit including a heating element movably mounted on the holding device; means for normally urging the igniting unit to an open-circuit position on said holding device; an electrical circuit including cooperating contacts carried by said holding device and igniting unit for energizing the heating element when at least a part of the igniting unit is moved to a position on said holding device in which said contacts are in engagement; electromagnetic means included in said circuit for holding the igniting unit in said closed-circuit position by direct magnetic attraction therebetween, said means being mounted on said holding device and engaged by means carried by the igniting unit and included in said circuit when the igniting unit is moved to the closed-circuit position, the engagement of said electromagnetic means and the means of the igniting unit closing said circuit; and means for decreasing the current in said electromagnetic means upon the heating element reaching a predetermined desired heat, whereupon the holding force of the electromagnetic means is reduced and the igniting unit is thereby released to be moved into the open-circuit position by said urging means.

7. In an electric cigar lighter, a holding device; an igniting unit including a heating element movably mounted on the holding device; means including an electrical circuit for energizing the heating element when the igniting unit is moved to a closed-circuit position on said holding device; means for normally urging the igniting unit to open-circuit position; electromagnetic means included in said circuit for holding the igniting unit by magnetic attraction in closed-circuit position, said means being mounted on said holding device and engaged by said igniting unit when the latter is moved to said closed-circuit position, the engagement between said electromagnetic means and igniting unit closing said circuit and simultaneously energizing the electromagnetic means and the heating element; and means including a heat-responsive switch for opening the circuit to said electromagnetic means upon the heating element reaching a predetermined desired heat whereby the igniting unit is released and moved into open-circuit position by the urging means.

8. In an electric cigar lighter, a holding device; an igniting unit including a heating element movably mounted on the holding device; means including an electrical circuit for energizing the heating element when the igniting unit is moved to a closed-circuit position on said holding device; means for normally urging the igniting unit to open-circuit position; electromagnetic means included in said circuit for holding the igniting unit by magnetic attraction in closed-circuit position, said means being mounted on said holding device and engaged by said igniting unit when the latter is moved to said closed-circuit position, the engagement between said electromagnetic means and igniting unit closing said circuit and simultaneously energizing the electromagnetic means and the heating element; and means including a heat-responsive switch for altering the circuit to said electromagnetic means upon the heating element reaching a predetermined desired heat whereupon the holding force of said magnetic means is reduced and the igniting unit is released and moved into open-circuit position by the urging means.

9. In an electric cigar lighter, a holding device; an igniting unit including a heating element movably mounted on the holding device; means including an electrical circuit for energizing the heating element; means for normally urging the igniting unit to open-circuit position; electromagnetic means for holding the igniting unit in closed-circuit position; a resistance connected in series with the electromagnetic means; and means including a heat-responsive switch for normally shunting the resistance from the circuit, the shunt being removed upon the heating element attaining a predetermined desired heat and the current in the electromagnetic means being decreased whereby the igniting unit is released and moved into open-circuit position.

10. In an electric cigar lighter, a holding device; an igniting unit mounted on the holding device; an electromagnetic contact mounted in the base of the holder; and a heating element having a contact cup encircling the same mounted on the igniting unit and adapted to engage the electromagnetic contact of the base when the igniting unit is moved to a position to close a circuit for energizing the heating element, the electromagnetic contact maintaining the contact cup in engagement therewith by magnetic attraction and holding the igniting unit in closed-circuit position.

11. In an electric cigar lighter, a holding device; an igniting unit mounted on the holding device; an electromagnetic contact mounted in the base of the holder; a heating element having a contact cup encircling the same mounted on the igniting unit and adapted to engage the electromagnetic contact of the base when the igniting unit is moved to closed-circuit position to close

a circuit for energizing the heating element; and means for urging the igniting unit to open-circuit position, the electromagnetic contact holding the contact cup in engagement therewith by magnetic attraction against the action of said last-mentioned means.

12. In an electric cigar lighter, a holding device; an ignit ng unit mounted on the holding device; resilient means for holding said unit in a shallow position on said holding device; an electromagnetic contact mounted in the base of the holder; a heating element having a contact cup encircling the same mounted on the igniting unit and adapted to engage the electromagnetic contact of the base when the igniting unit is moved to a deep position to close a circuit for energizing the heating element, the electromagnetic contact holding the contact cup in engagement therewith by magnetic attraction against the action of said resilient means; and means for decreasing the magnetism of the contact upon the heating element reaching a predetermined temperature whereupon the resilient means moves said igniting unit to the shallow position.

13. In an electric cigar lighter, a holding device; an igniting unit mounted on the holding device; an electromagnetic contact mounted in the base of the holder; a heating element having a contact cup encircling the same mounted on the igniting unit and adapted to engage the electromagnetic contact of the base when the igniting unit is moved to closed-circuit position to close a circuit for energizing the heaing element, the electromagnetic contact holding the contact cup in engagement therewith by magnetic attraction; and heat-responsive means for decreasing the magnetism of the contact upon the heating element attaining a desired useable heat to cause the electromagnetic contact to release the holding action on the contact cup.

14. In an electric cigar lighter, a holding device; an igniting unit mounted on the holding device; an electromagnetic contact mounted in the base of the holder, said electromagnetic contact comprising a contact of magnetizable material secured to a core and a magnetic coil surrounding said core and connected in series with said contact; and a heating element having a contact cup encircling the same mounted on the igniting unit and adapted to engage the electromagnetic contact of the base when the igniting unit is moved to closed-circuit position to close a circuit for energizing the heating element, the electromagnetic contact upon completion of the energizing circuit holding the contact cup in engagement therewith by magnetic attraction, said electromagnetic contact and contact cup having cooperating surfaces providing a substantial area of contact therebetween.

15. In an electric cigar lighter, a holding device; an igniting unit mounted on the holding device; a flat electromagnetic contact mounted in the base of the holder; and a heating element having a contact cup encircling the same provided with a flat contact-engaging portion mounted on the igniting unit and adapted to engage the flat electromagnetic contact of the base when the igniting unit is moved to closed-circuit position to close a circuit for energizing the heating element, the flat electromagnetic contact holding the contact cup in engagement therewith by magnetic attraction.

16. In an electric cigar lighter, a holding device; an igniting unit including a heating element movably mounted on the holding device; a contact carried by the igniting unit and electrically connected to the heating element; means for normally urging the igniting unit to an open-circuit position on said holding device; an electromagnet carried by the holding device; a contact fixedly mounted on the holding device and electrically connected to the electromagnet; an electric circuit for energizing the heating element and electromagnet when a part of the igniting unit is moved to bring the contact thereon into engagement with the contact on the holding device, said electromagnet, when energized, being operative to magnetize the fixed contact on the holding device to hold the igniting unit in the closed-circuit position by magnetic attraction; and heat-responsive means for deenergizing the electromagnet and removing the magnetic attraction whereby the urging means returns the igniting unit to its normal open-circuit position on the holding device.

17. In an electrical cigar lighter, a holding device; an igniting unit including a heating element movably mounted on the holding device; means including an electric circuit for energizing the heating element when the igniting unit is moved to a closed-circuit position on the holding device; and electromagnetic means energized upon movement of the igniting unit to said closed-circuit position, said electromagnetic means having a pole piece magnetized thereby when energized, the pole piece being operative when magnetized to directly act upon and hold the igniting unit in the said closed-circuit position.

18. In an electric cigar lighter, a holding device; a contact carried by said holding device; an igniting unit having a heating element thereon movably mounted on the holding device; a contact carried by the igniting unit and electrically connected to the heating element; an electric circuit for energizing the heating element when the igniting unit is moved on the holding device to a position in which the contacts are in engagement; electromagnetic means on the holding device energized upon engagement of said contacts and operative, when energized, to act directly upon and hold the igniting unit in closed-circuit position by magnetic attraction; and means responsive to the heat from the heating element for altering the circuit and decreasing the magnetic attraction whereby the electromagnetic means becomes inoperative to hold said igniting unit in the closed-circuit position upon the heating element reaching a predetermined temperature.

19. In an electrical cigar lighter, a holding device; an igniting unit including a heating element movably mounted on the holding device; an electromagnet; and an energizing circuit for said heating element and electromagnet energized by manual movement of the igniting unit to a closed-circuit position on said holding device, said electromagnet when energized by movement of the igniting unit to the said closed-circuit position acting directly upon and holding the unit in said position by magnetic attraction until the heating element thereof has reached a predetermined temperature.

20. In an electrical cigar lighter, a holding device; an igniting unit including a heating element movably mounted on the holding device; means including an electric circuit for energizing the heating element when the igniting unit is moved to a closed-circuit position on the holding device; and electromagnetic means, energized by and rendered operative upon movement of the ignit-

ing unit to its closed-circuit position on the holding device, for holding the igniting unit in the said position by magnetic attraction between a part of the igniting unit and a part of the holding device until the heating unit reaches a predetermined temperature.

21. In an electrical cigar lighter, a holding device; an igniting unit including a heating element movably mounted on the holding device; resilient means normally maintaining said igniting unit in a storage position on the holding device; an electromagnet on the holding device; a common circuit for said heating element and electromagnet energized by manual movement of the igniting unit from said storage position to a closed-circuit position on said holding device, the closing of said circuit simultaneously energizing the heating element and electromagnet, said electromagnet, when energized, being operative to hold said igniting unit in closed-circuit position against the action of the resilient means by magnetic attraction; and means responsive to heat from the heating element for completing a shunt circuit around said electromagnet and rendering the electromagnet inoperative to hold the igniting unit in said closed-circuit position upon the heating element reaching a predetermined heat, whereby the resilient means returns said igniting unit to storage position and opening the electrical circuit.

RUSSELL D. CONBOY.