Jan. 19, 1943. J. PORTER 2,309,011

SNUFFER-LIGHTER DEVICE

Filed June 12, 1941

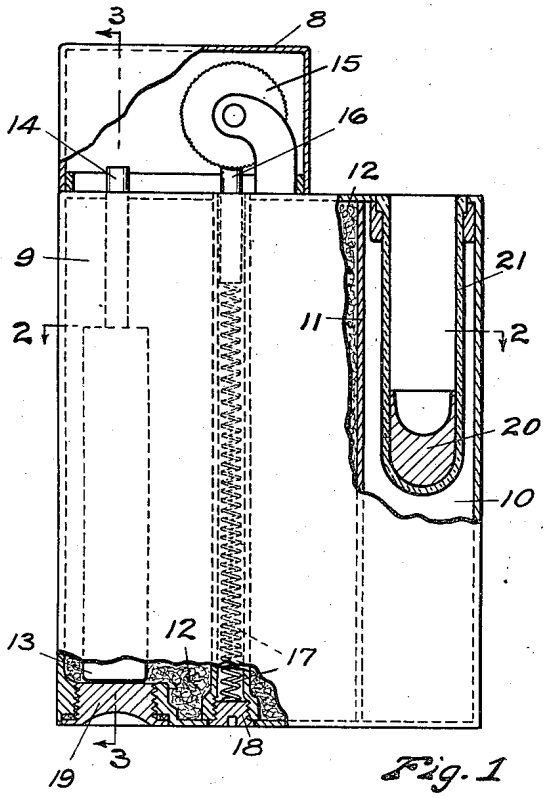

Fig. 1

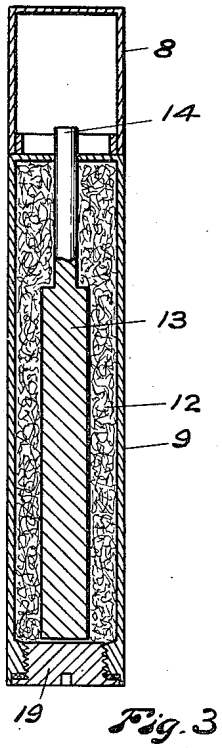

Fig. 3

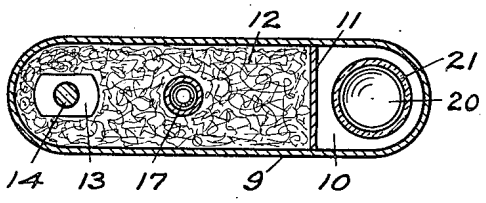

Fig. 2

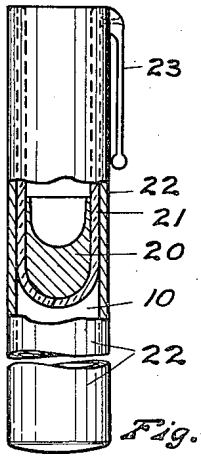

Fig. 4

INVENTOR
John Porter
BY
G. Wright McArnold
ATTORNEY

Patented Jan. 19, 1943 2,309,011

UNITED STATES PATENT OFFICE

2,309,011

SNUFFER-LIGHTER DEVICE

John Porter, Seattle, Wash., assignor of twenty-five per cent to G. Wright Arnold and twenty-five per cent to Edward W. Allen, both of Seattle, Wash.

Application June 12, 1941, Serial No. 397,774

1 Claim. (Cl. 131—256)

My invention relates to a snuffer device for use in connection with cigarettes, cigars and the like. As my device will find its greatest application of use in connection with cigarettes, I will so describe the same by way of illustration and not as a limitation of the invention.

While some forms of snuffers for use on cigarettes have been available in the prior art, still such types of snuffers have not been used to a substantial extent in view of the fact that a lit cigarette, when snuffed by such prior art snuffers and then relit, had the flavor of a partially used cigarette. In other words, if a cigarette was put out or the light extinguished by the prior art snuffers, then if attempt were made to again use such cigarette and relight the same, the flavor was greatly impaired and a flavor of a partially used cigarette obtained. For such reason, most cigarette smokers either completed the smoking of the cigarette, or smoked the portion thereof they desired and then, either with or without extinguishing the light of the cigarette, discarded the so-called "butt."

It is an object of my invention to provide a device which may be used to extinguish the fire or light from cigarettes so that a smoker may smoke any number of puffs desired from a cigarette, then extinguish the fire and relight the cigarette for any number of periods of times desired and permitted by the size of the cigarette, and at the same time to maintain the cigarette in a condition so that the original aroma of the cigarette is present during the smoking period, whether the light is intermittent or continuous. Some of the many advantages which result from such objects of my invention will be hereinafter later described.

It is an object of my invention to provide a cigarette snuffing device which will snuff and extinguish the light of a cigarette and at the same time absorb or eliminate the odors eminating therefrom.

It is a further object of my invention to snuff out a cigarette and at the same time provide a coating or relatively hard ash which appears to function as a protective coating, enhancing the keeping qualities, as respects freshness, of a partially consumed cigarette.

At the present time there is a tendency of cigarette manufacturers to provide an extra long or imperial size cigarette. It is an object of my invention to provide means whereby the extra length of such cigarettes may be made available for real use to smokers.

The above mentioned general objects of my invention, together with others inherent in the same, are attained by the device illustrated in the following drawing, the same being preferred exemplary forms of embodiment of my invention, throughout which drawing like reference numerals indicate like parts:

Figure 1 is a view in front elevation with parts shown in dotted lines and with a portion of the cover plate removed of a device embodying my invention;

Fig. 2 is a sectional view taken substantially on broken line 2—2 of Figure 1;

Fig. 3 is a sectional view taken substantially on broken line 3—3 of Figure 1;

Fig. 4 is a view in front elevation with parts shown in dotted lines and with a portion of the cover plate removed of a modified form of my invention.

Referring to the drawing, the case 9 may be made of any suitable material, such as metal or a plastic, as "Bakelite." A wall 11 cooperates with the case member 9 to provide a snuffer chamber 10. This snuffer chamber 10 is separated from the lighter fluid chamber 12 so that lighting fluid in the chamber 12 may not enter the chamber 10. Within the snuffer chamber is preferably provided a cigarette holding well formed by cylindrical walls 21 which are preferably formed of glass, porcelain or the like. Within the cigarette well formed by the walls 21 is positioned a smoke and gas odor consuming material in the nature of carbon 20. Preferably the carbon 20 is in the form of a cylindrical or cup like member so that the end portion of a lit cigarette may be completely surrounded by the carbon 20. Also the cigarette well is preferably of such size to serve as a cigarette "butt" carrying or retaining device.

Within the chamber 12 is positioned the usual cotton or other absorbent means which may be saturated by the lighter fluid. This lighter fluid is generally a rather volatile hydrocarbon, as gasoline. Within the chamber 12 I employ a carbon wick 13 to serve as the lighter wick of my lighter device. Preferably the carbon wick 13 has a reduced end portion 14. In this way I am able to provide a relatively large contact area between the carbon wick 13 and the fluid saturated cotton adjacent such wick and at the same time to provide an external end portion giving a light of desired size. The fill screw 19 functions as a removable screw so that gasoline or other liquid hydrocarbon may be deposited to properly saturate the cotton surrounding the carbon wick 13. Also such fill screw 19 functions as means

to permit removal or insertion of a new carbon wick 13.

As illustrative of a spark producing device I have shown the wheel 15, the flint 16, and the spring 17 urging the flint 16 against the periphery of the wheel 15. Also I have shown a screw 18 which will permit insertion of new flint as the same wear out. Obviously, the parts 15 to 18 inclusive are merely illustrative of a spark producing device and any of the well known means on the market for such purpose may be obviously used.

Similarly the positioning of the lighter along side of the snuffer chamber 10 is merely illustrative and the same may be in end to end relation. The enclosing cover 8 is illustrative of a form of cover which may be used.

The type of carbon to be used in the carbon wick 13 or to be used in the carbon 20 is the amorphous form, or charcoal. I have discovered that charcoal has an attraction for the noxious gases heretofore present under conditions presently considered and serves to remove the so-called partially used flavor of a cigarette and also serves to absorb the gasoline or other fuel flavor from the wick 13.

In Fig. 4, I have shown a modified form of my invention with a snuffer device embodied within a pencil-like carrying case 22 and having a pocket engaging clip 23. As the walls 21, forming a cigarette well, the charcoal cup 20 and snuffer chamber 10 of either Figs. 1 to 3 or Fig. 4 may be identical they are given similar numbers. The device of Fig. 4 obviously eliminates the advantages of having a lighter present, but adds the advantage of having a relatively small unit which may be carried like a pencil and a cigarette may there be extinguished and the "butt" easily carried within the well. The depth of well is preferably long enough to retain cigarette "butts" and short enough to have a portion thereof protruding so the same may be readily removed.

One explanation of the mode of operation of my cigarette snuffer appears to be: Upon inserting the cigarette in the snuffer the oxygen is cut off and thereby carbon monoxide and carbon dioxide gases collect, and both being "hungry" for oxygen positively extinguish any flame because of the lack of oxygen. In other words, whatever particle is under combustion is immediately "suffocated" for the lack of oxygen and is extinguished. The charcoal in the snuffer then immediately absorbs the gases and keeps them from remaining in the burnt end of the cigarette. In other words, the carbon draws to itself the gases and even possibly draws the gases from the unburnt part of the cigarette so that it acts as a scavenger therefor.

An important advantage of my invention is that it will eliminate the foul smoke from smouldering cigarettes. As there was always the possibility that a few more puffs may be taken later from a cigarette, it has been customary for smokers not to extinguish cigarettes. Therefore, the cigarette was allowed to remain lit, and often with the results: (1) loss of the balance of the cigarette, (2) continuous emitting smoke therefrom, (3) the possibility of lighting other material in the ash tray, as "butts" and the like, and (4) the possible fire hazard. The possible fire hazard is a matter of serious moment. It is common knowledge that the furniture about the home or office of an average cigarette smoker is marred or seriously damaged by cigarette burns. Many of such cigarette burns will ruin the furniture surfaces and will require resurfacing of the same. Many other times fires have been started from cigarettes which are left burning. When a cigarette is left burning in an ash tray, it is generally left with the mouth end portion out of the tray and the opposite end within the ash tray. As such opposite or lit end burns away, the cigarette will become overbalanced and will generally fall out of the ash tray and on to furniture and the like.

It is obvious that where a smoker may conveniently snuff out a cigarette, and at the same time later relight the same and obtain a satisfactory smoke that every incentive is given to such cigarette smoker to eliminate the presence of burning "butts" which may be left about in places where damage to furniture or fire hazard will be present.

Another major advantage of a device embodying my invention is the economizing of cigarettes. Due to the fact that cigarettes may be put out and relit with a satisfactory smoke, smokers will have every inducement to do so. As most cigarette smokers inhale and desire spacing to a greater or lesser degree between puffs of the cigarette, they can well adapt themselves to a practice of smoking a few puffs and then extinguishing the cigarette and relighting the same for puffs later. Also many smokers who by occupation or circumstance are required to take only a few puffs of a cigarette at one time and who at the present time are required to throw away a relatively long "butt" of a cigarette will find the device of my invention exceptionally useful to the needs of such parties. Without attempting to list such occupation and circumstances, where parties are required to throw away relatively long "butts" of cigarettes, I will list some thereof: Barbers, (attempting to smoke between the arrival of customers), operators of public conveyances (as at the end of the line or when reporting to the dispatcher), restaurant operators (attempting to smoke a few puffs between serving patrons), and shop and office help and the like (attempting to smoke a cigarette on a short recess). Again in view of the present tendency of manufacturers to make extra long cigarettes, which are generally termed in the trade as "imperials," cigarette smokers with the use of a device embodying my invention will be able to take full advantage of the extra length of such cigarettes and at the same time obtain a satisfactory smoke.

A cigarette, when snuffed by a device embodying my invention and where the snuffing takes place in the presence of charcoal, obtains an end coating or relatively hard ash, which appears to function as the protective coating, enhancing the keeping qualities, as respects freshness, of a partially consumed cigarette.

The charcoal wick 13 of my invention provides for the elimination of the odor of the fluid used in the mechanical fluid burning lighter. Further, such charcoal wick because of the porous character thereof serves to keep sufficient liquid fuel at the external tip portion which is to be lit and at the same time prevents the escape of excessive fuel. Further, such a charcoal wick provides a substantially permanent wick and one of long life, if not permanent life, when properly used.

Obviously, changes may be made in the forms, dimensions and arrangement of the parts of my invention, without departing from the principle thereof, the above setting forth only preferred forms of embodiment.

I claim:

In a device of the class described, a case member having therein a cigarette snuffing chamber of a size to receive longitudinally a portion of a cigarette; and a solid charcoal member disposed at the inner end portion of said chamber and having therein a cup like well of the size to surround the ash portion on the lit end of a cigarette, whereby a lit cigarette inserted in said snuffer chamber with the ash portion advancing until contact with said charcoal member obtains, is snuffed while the ash portion is surrounded by the charcoal forming said well and the gases and odors from such cigarette are absorbed, eliminating contamination of the flavor of the cigarette for further use thereof.

JOHN PORTER.