Jan. 6, 1931. J. C. FISHEL 1,788,093

CIGAR AND CIGARETTE LIGHTER

Filed June 1, 1928

Fig. 1.

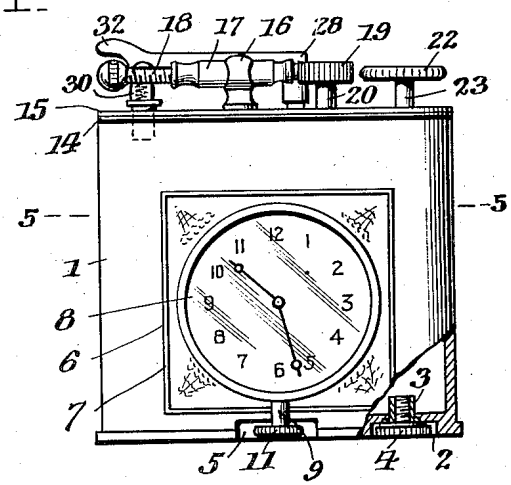

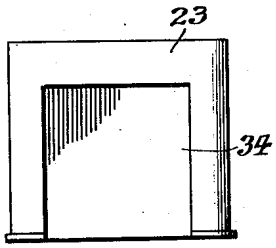

Fig. 7.

Fig. 2.

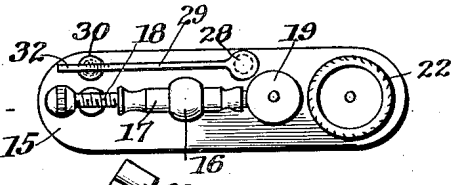

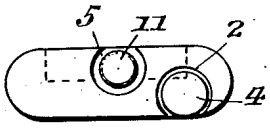

Fig. 3.

Fig. 4.

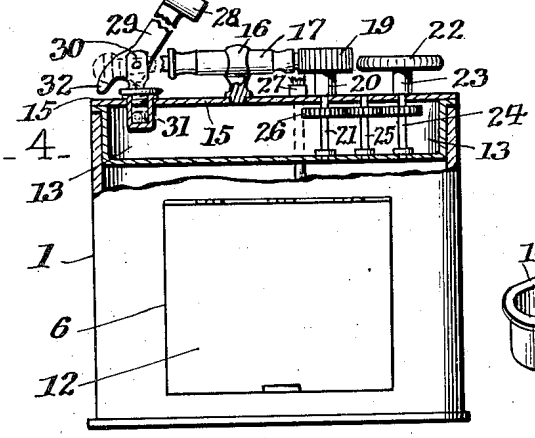

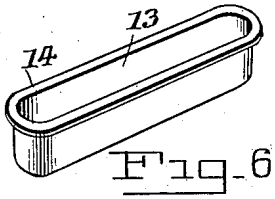

Fig. 6.

Fig. 5.

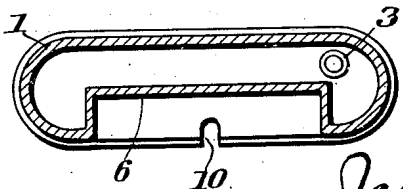

Inventor
Jesse C. Fishel

by Jacobi & Jacobi
Attorneys

Patented Jan. 6, 1931 1,788,093

UNITED STATES PATENT OFFICE

JESSE C. FISHEL, OF BROOKLYN, NEW YORK

CIGAR AND CIGARETTE LIGHTER

Application filed June 1, 1928. Serial No. 282,197.

This invention relates to new and useful improvements in pyrophoric lighters and more particularly to a lighter of the pocket type, the primary object of the invention being to provide a simple and efficient lighter of the class described with means in connection therewith for combining therewith, a watch, vanity case, coin holder, picture or other receptacle.

A further object of the invention resides in constructing a lighter of the character mentioned, the body of which is moulded preferably of phenolic material, such as bakelite or the like, or of some other similar plastic material, providing a space therein for the reception of some other useful and handy article, such as a watch, vanity case, coin holder or the like.

A still further object resides in providing a lighter with improved operating means for the producing of a spark, and a still further object resides in providing a thumb wheel separate from the flint wheel with a gear train connected with the shafts of said wheel whereby the flint wheel is rotated upon the rotation of the thumb wheel.

A still further object resides in providing an improved means for the support of the operating mechanism in connection with the body or reservoir of the lighter and another object is to provide an improved means for the support of extra flint.

With these and other objects in view, my invention consists in the novel features of construction, combination and arrangement of parts as will be hereinafter referred to and more particularly pointed out in the specification and claims.

In the accompanying drawing forming a part of this application:

Figure 1 is a front elevation of a lighter constructed in accordance with my invention and having a watch mounted in the body thereof, a portion of the lighter body being broken away with parts in section.

Figure 2 is a top plan view thereof.

Figure 3 is a reduced bottom plan view of same.

Figure 4 is a front elevation, partly in section, of a lighter constructed in accordance with my invention, showing a slight modification in that a vanity case is disclosed mounted in the body.

Figure 5 is a horizontal section as seen on the line 5—5 of Figure 1 with the watch removed.

Figure 6 is a perspective view of the cup-like member which supports the operating mechanism, removed from the body of the lighter; and

Figure 7 is a front elevation of a slightly modified form of body of the lighter.

In describing the invention, I shall refer to the drawing, in which similar reference characters designate corresponding parts throughout the several views and in which 1 designates the body of my improved lighter which is moulded from preferably phenolic or light material, the same being of a shape and size to conveniently fit the pocket of the user and adapted to form a reservoir for liquid fuel. The body 1 is moulded with an open top and a flat bottom wall, the latter being provided with a recessed portion 2 in which is an opening communicating with the hollow interior of the body. An internally threaded collar 3 is mounted in the opening which receives the threaded stem of a closure 4, the head of the latter being received in the recess or countersunk portion 2 to fit flush with the lower face of the bottom wall.

A second recessed portion 5 is provided in the bottom of the body 1 about centrally thereof for a purpose to be hereinafter and more particularly described.

As referred to in the objects of the invention hereinabove set forth, the lighter is particularly designed for combination with a watch, vanity case or other useful article and in moulding the body 1 a depression 6 is formed in the front wall thereof, preferably rectangularly in shape. The moulding of this depression in the wall of the body slightly reduces the area within the reservoir formed in the body but does not interfere in any manner with the operation of the device, as appears obvious. When it is desired to utilize this lighter in connection with a watch, a metal casing 7 is sweated or other-

wise secured in the depression of the front wall of the body 1 and said casing is designed to receive therein the watch 8, the stem 9 of which projects through a recess 10 formed in the bottom wall of the depression 6, permitting the crown 11 of the stem to be received in the recess 5 formed in the bottom wall of the body. The construction is such that the crystal of the watch is substantially flush with the front wall of the body 1.

In Figure 4 of the drawing, I have shown a slight modification wherein instead of a watch being mounted in the depression 6, a vanity case 12 is fitted therein. Of course, any other desired article may be fitted in this recess, as I do not wish to be limited to the particular articles herein shown and described.

In providing the lighter construction, I utilize an elongated trough or cup-shaped member 13 formed of metal which is provided at its upper peripheral edge with an outstanding flange 14. This trough or cup-shaped member 13 is of a size and shape to fit snugly in the top of the body 1 so that the flange 14 thereof rests upon the upper peripheral edge of said body, as clearly shown in Figure 4 of the drawing. The member 13 is secured in any desired manner with the body 1 and a cap plate 15 is applied over the member 13, as also shown in Figure 4. Mounted on this cap plate 15 is a bracket 16 which supports a flint tube 17 which is internally threaded at one end to receive a hand operated screw 18, such as is usually provided in connection with lighters of this character. The flint in the tube is adapted to be projected for contact with a flint wheel 19 which is supported on the upper end of a shaft 20, the latter being reduced as shown at 21 and projected through an opening in the plate 15 and supported in the bottom of the member 13. A thumb wheel 22 is mounted on a shaft 23 which is reduced as shown at 24 and projected through the plate 15 and mounted in the bottom of the member 13 in longitudinal alinement with the shaft 21. Another shaft 25 is supported between the plate 15 and the bottom of the member 13 intermediate of the shafts 21 and 24 in alinement therewith. Each of the shafts 21, 24 and 25 has mounted thereon for rotation therewith a gear 26 which mesh one with the other, forming a train so that upon rotation of the thumb wheel 22, the flint wheel 19 will be rotated in the same direction as the thumb wheel and cause a spark from the flint carried in the flint tube 17.

A wick tube 27 is mounted in the plate 15 projecting through the member 13 into the reservoir formed within the body 1, the same carrying a wick which is adjacent the end of the flint tube 17 and when the proper fuel is introduced into the reservoir through the opening in the bottom of the body, the spark projecting from the flint will ignite the wick. A cover 28 is provided for the wick which is carried on the end of an arm 29, the latter being fulcrumed adjacent its rear end between the bifurcated ends of an upstanding member 30, mounted on the top plate 15, and a conventional form of spring therein tends to hold the arm 29 in its raised or lowered positions. The outer end of the arm 29 is provided with a curved finger operating projection 32, so that pressure thereon will raise the cover 28 so that the latter will be retained in its raised position by action of the aforesaid spring. The cover 28 may be readily returned to its effective position over the wick by pressing the finger on said cap, as appears obvious. Also mounted in the top plate 15 in a plane in alinement with the screw 18 is a socket 31 having a threaded closure therefor. This socket is adapted to receive extra flint and the threaded closure may be only removed from the socket 31 by removing the screw 18 from the flint tube 17.

In Figure 7 I have shown a slightly modified form of the invention in which the body 23, which is moulded of the same material as described in connection with the previous form has a depression 34 formed in the front wall thereof, the depression extending into the bottom wall of the body. This enables a vanity case, a picture or other article to be slipped into the depression from the bottom of the body and sweated or otherwise secured therein. Otherwise, this member is of the same design and construction as the previously described form.

From the foregoing description, the construction and manner of operating my improved device will be readily understood and it will be seen that I have provided a simple, inexpensive and efficient means for carrying out the objects of the invention.

While I particularly describe the elements best adapted to perform the functions set forth, it is obvious that various changes in form, proportion and in the minor details of construction may be resorted to without departing from the spirit or sacrificing any of the principles of the invention.

Having thus described the invention, what I claim is:

1. In a pyrophoric lighter, a body forming a reservoir, having an open upper end, a trough-like member fitted in the open end of said body and forming a closure therefore, a flange on said member resting on the peripheral edge of said reservoir, a cap plate applied to said trough-like member, a flint tube mounted on said plate, a wick mounted on said plate and projecting through said trough-like member into said reservoir, a flint wheel supported above said plate, a thumb wheel supported above said plate and means below said plate within said trough-like member connecting said thumb and flint

wheels to rotate the latter upon the rotation of the former.

2. In a pyrophoric lighter, a body forming a reservoir, having an open upper end, a trough-like member fitted in the open end of said body and forming a closure therefor, a flange formed integral with the upper edges of the walls of said trough-like member and bent outwardly to rest upon the upper peripheral edge of said reservoir, a cap plate applied to said trough-like member, a flint tube mounted on said plate, a wick mounted on said plate and projecting through said trough-like member into said reservoir, a flint wheel rotatably supported on said plate, a thumb wheel rotatably supported on said plate and gearing below said plate and within said trough-like member connecting said thumb and flint wheels to rotate the latter upon the rotation of the former.

3. In a pyrophoric lighter, a body forming a reservoir, having an open upper end, a trough-like member fitted in the open end of said body and forming a closure therefore, a cap plate applied to said trough-like member, a flint tube mounted on said plate, a wick mounted on said plate and projecting through said trough-like member into said reservoir, a shaft rotatably supported between the plate and the bottom of the trough-like member and a flint wheel carried on such shaft above said plate, a second shaft rotatably supported between said plate and the bottom of said trough-like member, a thumb wheel carried on said latter shaft above the plate and means connecting said shafts below said plate whereby said flint wheel will be rotated upon the rotation of said thumb wheel.

4. In a pyrophoric lighter, a body forming a reservoir, having an open upper end, a trough-like member fitted in the open end of said body and forming a closure therefor, a cap plate applied to said trough-like member, a flint tube mounted on said plate, a wick mounted on said plate and projecting through said trough-like member into said reservoir, a shaft rotatably supported between the plate and the bottom of the trough-like member and a flint wheel carried on such shaft above said plate, a second shaft rotatably supported between said plate and the bottom of said trough-like member, a thumb wheel carried on said latter shaft above the plate, a gear train connecting said shafts whereby said flint wheel will be rotated upon the rotation of the thumb wheel in the same direction as the latter.

In testimony whereof I affix my signature.

JESSE C. FISHEL.