April 15, 1930. J. HOLTZMAN 1,754,319

LIGHTER

Filed Sept. 8, 1927

Fig. 1

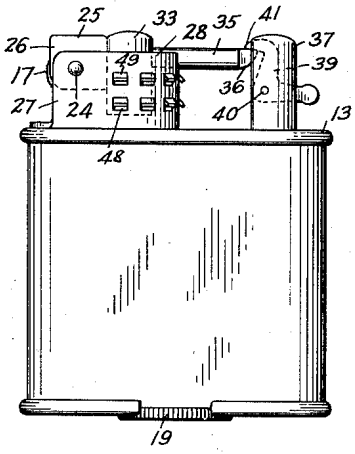

Fig. 2

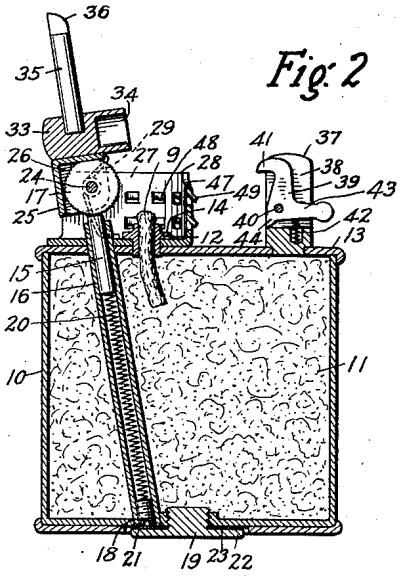

Fig. 3

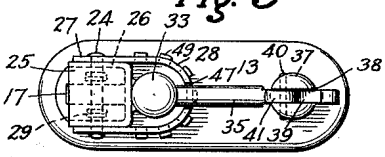

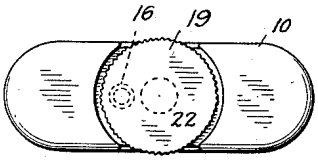

Fig. 4

Fig. 5

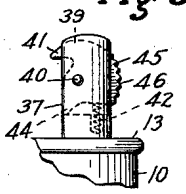

Fig. 6

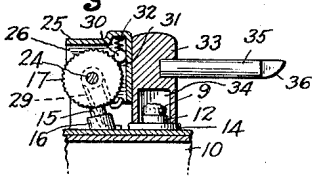

INVENTOR
John Holtzman
BY
Harry Jacobson
ATTORNEY

Patented Apr. 15, 1930 1,754,319

UNITED STATES PATENT OFFICE

JOHN HOLTZMAN, OF NEW YORK, N. Y.

LIGHTER

Application filed September 8, 1927. Serial No. 218,168.

This invention relates to lighters of the type wherein a toothed wheel abrades a pyrophoric member and throws sparks on to a suitable wick for igniting the wick. In those lighters which have been previously designed to be carried in the pocket, the wheel has most frequently been operated either automatically by means of springs after the wheel operating mechanism has been manually released, or the wheel has been manually operated directly as by means of the thumb. The automatically operated lighters, however, are open to the objection that the normally locked operating mechanism may be unintentionally or accidentally released, in the pocket, as by coming into contact with articles carried in the pocket or with the material of the pocket itself, with consequent danger of setting fire to the pocket. Those lighters having a manually operated wheel are objectionable for the reason that the thumb or finger used for turning the wheel is readily soiled thereby and sometimes abraded and injured. In both types of lighters, the wick flame is readily extinguished by a slight air movement, draft or breeze.

My invention is designed to provide a lighter in which the wick flame is protected, the wheel automatically operated only when the lock mechanism therefor is designedly released, and in which the other objections above set forth are met.

The various objects of my invention will be clear from the description which follows, and from the drawings, in which,

Fig. 1 is a front view of my improved lighter, showing the parts in the locked positions thereof.

Fig. 2 is a vertical section of the same, showing the parts in the positions assumed thereby after the wheel has been operated to strike a light.

Fig. 3 is a top plan view of the lighter shown in Fig. 1.

Fig. 4 is a bottom plan view of the same.

Fig. 5 is a front view of a modified form of locking catch particularly adapted to prevent accidental release thereof, and

Fig. 6 is a vertical section of part of the lighter showing a modified form of the wheel operating mechanism, whereby the wheel is rotated in one direction only.

In that practical embodiment of my invention which I have illustrated herein, the casing 10 is made of suitable size and shape to fit easily into the pocket of the user, and is designed to hold inflammable liquid 11 therein, such as benzine, alcohol or the like, or to hold absorbent material soaked with such liquid. The wick bushing 12, adapted to hold the wick 9, is removably maintained in place in the upper end 13 of the casing as by means of a threaded connection therewith, or a tight fit, or in any other suitable manner which will suggest itself to those skilled in the art. An extending flange 14 may be provided on the bushing 12 for forming a leakproof joint with the casing as will be described more fully hereinafter. By making the wick holder removable, the difficulty heretofore experienced when trying to insert a wick into the holder is obviated. It has heretofore been customary to compress the wick downwardly into the holder therefor, pushing the entire length of the wick through the holder. With my improved construction, the wick holder may be removed entirely, after which only the upper end of the wick is pushed up through the opening in the holder until that end projects slightly through the holder. The depending portion of the wick need then only be inserted into the casing and the bushing replaced. Adjustment of the wick is effected before securing the parts together by pulling either on the projecting upper end or on the lower end, it being understood that the wick being of soft material is much more easily arranged in position by pulling thereon than by attempting to force it through an opening by compression. Replacement of the wick by the user when it has been burnt out may also be effected rapidly and easily in the same manner without the necessity for using special tools for that purpose.

A flint cylinder 15 of the usual type is supported in the flint holding tube 16, which is inclined sufficiently to bring the upper end of the flint in the proper position relatively to the toothed spark producing wheel 17 and to bring the lower end 18 of the tube near

the center of the bottom of the casing so that the tube may be protected by the screw plug 19. A compression spring 20 arranged in the tube 16 and bearing on the flint 15 serves to maintain said flint at all times in pressed engagement with the sparking wheel 17. The lower end of the tube 16 may be threaded to receive the spring adjusting screw 21, though it is obvious that said screw may be dispensed with if desired, and the lower end of the spring allowed to rest directly against the head 22 of the screw plug 19, which normally conceals said screw and said spring. The casing is replenished with liquid by removing the plug 19 turning the lighter upside down, and pouring liquid in through the opening therefor. It will be seen that removal of said plug also exposes the adjusting screw 21, so that the pressure on the flint may be adjusted at the same time, if desired. For insuring a leak proof joint between the casing and the plug, I prefer to arrange a suitable washer as 23 between the head 22 of the plug and the bottom of the casing.

The device for automatically operating the toothed spark producing wheel 17 will now be described. Said wheel is loosely or fixedly mounted as may be found preferable, on the shaft 24 and is given its rotative movement through the medium of the swinging wheel cover 25 which is also mounted on said shaft. The shaft 24 passes through the sides 26 of said cover and is supported in the upstanding sides 27 of the wick shield 28. One end of the coil spring 29, mounted on the shaft 24, may engage the cover 25 while the other end may engage the shield 28, as shown, (Figs. 2 and 6) though it will be understood that the ends of the spring may be otherwise arranged, provided only that movement of the cover toward locked position winds up or stresses said spring, and movement of the cover toward the released position thereof (Fig. 2) allows the spring to unwind itself.

In that form of the wheel mounting illustrated in Fig. 2, the circumferential surface of the wheel is in close contact with the inner faces of the cover 25, whereby the wheel teeth engage the cover and the wheel is prevented from moving relatively thereto. In this construction, movement of the cover causes corresponding movement of the wheel. In the form illustrated in Fig. 6, however, the wheel is mounted on the shaft 24 independently of the cover and may move independently thereof. In this construction, I have shown a clutch of the ball type for operatively connecting the cover and the wheel whereby movement of the cover in one direction only that is, toward released position can cause movement of the wheel. The ball 30 may be merely inserted into the converging space 31 between the wheel and the cover, or said ball may be maintained in proper position if desired, by means of the compression spring 32, which urges the ball toward the narrow part of the space 31 and into engagement with the wheel teeth. When the cover is rotated in a counter clockwise direction, as viewed in the various figures, the ball is jammed between the wheel and the cover in the narrow part of the space 31 and causes both to rotate together. When, however, the cover is rotated in a clockwise direction, the ball tends to slip over the wheel teeth and to remain nearer the upper part of the space 31 and does not therefore operatively connect the cover and the wheel together, whereby movement of the cover does not effect movement of the wheel. The spring 32 is preferably used to insure the action above described though it may be dispensed with if the space 31 is properly shaped. It will be understood that while I have shown one form of operative ball clutch, for the purpose mentioned, I do not wish to be limited to said form since any other suitable types of such clutch may be used instead.

To the wheel cover is secured the wick cap 33, having the opening 34 in the lower part thereof. In the closed or locked position of the parts, the bottom edge of the cap, which rotates together with the cover 25, engages the upper surface of the flange 14 and excludes air from the wick thereby extinguishing the wick flame. The cam rod 35 which controls the movement of the wheel, is secured to and protects the cap 33, and is suitably curved and constricted at its free end to form the cam 36. Suitably fastened to the top 13 of the casing is the grooved post 37, in the groove 38 of which is pivoted the trigger catch 39 as on the shaft 40, said trigger being protected and substantially enclosed by said post. When the cam rod 35 is depressed, the cam 36 engages the hook end 41 of the trigger catch which extends slightly outside of the post, and forces said catch to rotate out of the way of the cam about the shaft 40 and against the action of the compression spring 42.

Said spring normally acts on the arm 43 of the trigger catch for urging said catch toward the locking position thereof, so that after the cam 36 has passed the hook end 41, said end engages the flat upper side of the cam rod and maintains said rod in the locked position thereof. A suitable lug as 44 may be provided on the trigger catch for preventing the spring 42 from rotating said catch too far. The arm 43 extends but slightly outside of the post 37 and does not present a projection long enough to be accidentally operated. If desired, the arm 43 may terminate in the slightly projecting finger piece 45, which, when depressed, removes the hook end 41 from the cam rod and allows the coil spring 29 to rotate the rod together with the wick cap, the wheel cover and wheel, with a rapid movement, whereby the wheel strikes sparks

from the flint and ignites the wick. When the rod 35 and the parts connected thereto are rotated in the opposite direction, the wick cap extinguishes the wick flame, the spring 29 is put under stress or wound up ready to lift the rod 35 when it is again released, and the rod is locked in place by the trigger catch.

As indicated in Fig. 5, the arm 43 of the catch may be dispensed with to obviate all danger of said arm being accidentally or unintentionally operated, and the catch may instead be formed with a serrated curved surface 46 of substantial length designed to be rotated by the thumb, and extending but slightly outside of the post 37. There being no decided projections on this form of catch, there is no danger whatever that it may accidentally be unlocked.

In order to enable the user to use the lighter in a breeze, I provide the wick shield 28, held to the casing top 13 by the wick bushing 12, or soldered or otherwise secured thereto as by suitable screws or rivets. An opening 47 may be provided in one end of the shield to allow the passage of the rod 35, the other end of the shield being left open if desired, to receive the wheel cover 25 or that end may be partly closed, the top of the shield being open. For supplying air to the wick, window openings 48 are provided formed by pressing part of the material 49 of the shield outwardly or inwardly as may be preferred, provided that the window material 49 is inclined in such a manner as to direct the air entering the shield upwardly toward the top of the flame so that the flame canont be extinguished by the entering air. To prevent leakage of liquid into the shield and about the wick holder, a suitable washer similar to the washer 23 may be interposed between the flange 14 of the wick holder and the base of the shield.

It will be seen that I have provided an improved lighter well adapted to operate under the severe conditions of practical use and for the purposes for which it is intended. I do not intend to be understood, however, as limiting myself to the specific structures shown and described, since various changes in the illustrated embodiments of my invention may be made without departing from the spirit and scope thereof or from the range of equivalents afforded by the appended claims.

I claim:

1. In a lighter, a container, a wind shield of less width and length than the top of the container and secured thereto inwardly of the periphery of the top, said shield having an open end adjacent one end of the top and being closed at the other end thereof and open at the top, and having perforations in the sides thereof for the passage of air, a shaft passing through the shield near the open end thereof, an abrading wheel loosely mounted on said shaft, a cover member for the wheel pivoted to said shaft and having depending sides arranged inside of the shield and having a flat top adapted to cover the top of said wheel in the normal position of said cover member, a cylindrical wick cap secured to said member, an extension on said member projecting beyond the cap, and arranged in its normal position at the top of the shield, and means for operatively connecting the cover member to said wheel for rotating said wheel on movement of said member out of its initial position, comprising an element movable with said member and forced thereby into operative engagement with the periphery of said wheel and movable with said member relatively to and about the periphery of the wheel on movement of said member towards its initial position.

2. In a lighter, a container, a wind-shield of less length than the top of the container mounted on said top, and open at one end and the top thereof and closed at the other end, the open end of the wind-shield being near and above one of the sides of the container, an abrading wheel pivoted to the wind-shield near said open end, a lever comprising a wheel cover mounted on the same axis as the wheel, a wick cap on one side of said cover depending below the bottom edge of said cover, and an elongated member extending beyond said cap, and movable means arranged between the cover and the periphery of the wheel for engaging said periphery on movement of the cover in one direction to rotate the wheel, and movable relatively to the wheel on movement of the cover in the opposite direction.

3. In a lighter, a substantially cylindrical post having a substantially vertical groove therein, a spring-pressed swingable operating lever having a substantially flat top at one end thereof, two flat sides spaced apart a distance less than any other dimension of said lever and substantially perpendicular to said top, and having a curved end between said sides serving as a cam and meeting said top and said sides, said top, sides and curved end forming the free extremity of said lever and being adapted to enter the groove of said post and to be entirely concealed therein, a spring-pressed disc pivoted to said post within said groove and having a hook end projecting beyond said groove on one side of said post and bounded by a roughened arcuate anti-friction surface beyond said hook end concentric with the pivot of said member and arranged below the top of said post and projecting beyond the other side of said post a slight distance sufficient only to enable the roughened surface to be manually engaged by a finger of the user, said hook end being adapted to be engaged by the curved cam end of said lever for rotating said disc backwardly on the rotation of said lever into initial position and being adapted to move forwardly

automatically to close over said flat top and to lock said lever in its initial position.

4. In a lighter, a swingable member having one end free and reduced in thickness and curved at its extreme end surface to serve as a cam, a swingable pivoted latch provided with means for engaging the uppermost surface of the free end of said member, said latch having a pair of flat parallel surfaces and an arcuate roughened anti-friction surface perpendicular to and joining the flat surfaces, and concentric with the pivot of the latch, and a spring urging said latch into locking position, said latch being adapted to be moved manually against the action of the spring by the engagement of the finger of the user with said roughened surface to release said member, and being moved by the direct engagement therewith of the curved cam end of the member against the action of said spring on the movement of said member into initial position, and being moved again by said spring into locking position with said means over the top and outside of the extremity of the free end of said member after said top has passed said means.

5. In a lighter, comprising a fuel container of rectangular shape having a substantially flat top and bottom walls, a tube passing within said container, a block of pyrophoric material yieldingly supported in said tube, a portion of said tube being projected above the top wall of the container, a windshield mounted on said top wall and secured thereto inwardly of the periphery of said top, said shield being open adjacent one end of the top wall and closed at the other end thereof, a wick projecting above said top and being substantially encircled by said shield, a shaft passing through the side walls of said shield near the open end thereof, an abrading wheel mounted on said shaft, a cover member pivotally mounted on said shaft having depending sides arranged inside of the shield and having a flat top to cover the wheel, a cylindrical wick cap secured to said member, spring means for resisting movement of the cover member out of its open position, said cover member being operatively connected to the wheel whereby to rotate the wheel to produce sparks to light the wick when actuated on its pivot in one direction, and to cap the wick and extinguish the light when actuated in the opposite direction against the action of said spring means.

6. In a lighter, a fuel container of substantially rectangular outline having a substantially flat top and bottom, a tube within said container, a block of pyrophoric material yieldably supported in said tube, a pair of parallel spaced projections upstanding from said top near one end thereof, a shaft passing through said projections, an abrading wheel mounted on said shaft between the projections, a wick projecting above said top adjacent said wheel, a cover member for the wheel pivotally mounted on said shaft and having depending sides arranged between said projections and said wheel and having a top to cover the wheel, an extension on said cover member of sufficient length to extend close to the other end of said top, a snuffing cap carried by said extension intermediate of the ends thereof to cover the wick, said extension being shaped at its extreme free end to permit the locking thereof in place, a post at said other end of said top, a spring-pressed element mounted in said post and being substantially enclosed thereby, said element being arranged to be engaged and moved in one direction by the extreme shaped end of said extension when said cover member is swung on its pivot to cap the wick and extinguish the light, and to move automatically in the other direction for engaging and locking said extreme shaped end of the extension.

7. In a lighter, a fuel container having a substantially flat top and bottom, a wind shield including a pair of projections near one end of the top spaced apart a distance less than the width of said top, and upstanding from said top inwardly of one end thereof, the remainder of said wind shield extending on one side of said projections toward the other end of the top, and having a closed end thereon, and spaced inwardly from the peripheral edge of said top throughout and of substantially the height of said projections, a wick projecting through said top intermediate the ends of said wind shield, a horizontal shaft supported by said projections, a peripherally toothed abrading wheel on the shaft between said projections, and means for operating said wheel in one direction only, for capping said wick, and for covering said wheel, comprising a wheel cover arranged about said wheel, and having depending sides pivoted on said shaft and arranged inside of said projections, a wick cap depending below said cover, and a member extending past said cap, and arranged normally at the top of the wind shield, and an element movable with the wheel cover, forced against the toothed peripheral surface of the wheel on movement of the cover out of its initial position to rotate the wheel, and movable with said cover relatively to and about said peripheral surface on movement of the cover toward its initial position.

8. In a lighter, a fuel container having a flat top and bottom, a pair of spaced projections upstanding from said top near one end thereof, a post of at least the height of said projections above said top rigidly secured to said top at the other end thereof, a horizontal shaft carried by said projections, a toothed wheel on said shaft, a wick projecting above said top intermediate said wheel and said post, an operating lever independent of the wheel and operatively connectable thereto

pivotally mounted on said shaft, said lever including at one extremity thereof an elongated member having a uniform cross-section throughout substantially its entire length, said member having a terminal portion of not greater cross-sectional area than that of the remainder of said member, said portion in its locked position extending to a point inwardly of the outermost face of the post, said lever including further a cap intermediate the extremities thereof depending below said member, said lever terminating at its other extremity in a covering member partly enclosing the wheel, and extending above and beyond the outermost part of the wheel toward one side of the container, and a yieldingly movable member extending above the top of the container and provided with a locking portion arranged normally inward of the post, the locking portion of said movable member being arranged to interlock with the terminal portion of said elongated member when said lever is swung to its locked position to cap the wick.

9. In a lighter, a casing having a flat top and bottom, a pair of projections upstanding from said top, a peripherally toothed abrading wheel revolvably mounted between said projections, a wick projecting from the top adjacent to and at one side of the wheel, a pyrophoric element yieldingly supported against said wheel, a wheel operating member supported by the casing, and a bodily movable rolling element within the operating member, operatively connecting the operating member to the wheel and engaging the toothed periphery of the wheel for rotating the wheel to light the wick when said operating member is moved in one direction and being moved relatively to the toothed periphery of said wheel when said operating member is moved in the opposite direction.

10. In a lighter, a casing having a substantially flat top, a pair of spaced supporting members upstanding from the top, a peripherally toothed abrading wheel revolubly mounted between said members above the top of the casing, a wheel operating member mounted between said spaced members and outside of the wheel, and means for operatively connecting the operating member to the wheel, on movement of the operating member in one direction comprising a movable rolling element engaging the toothed periphery of the wheel and confined between the wheel and said operating member.

11. In a lighter, a fuel container having a substantially flat top, a tube within said container, a block of pyrophoric material yieldably supported in said tube, a pair of parallel spaced projections upstanding from said top near one end thereof, a shaft passing through said projections, an abrading wheel mounted on said shaft between the projections, a wick projecting above said top adjacent said wheel, an operating member for the wheel pivotally mounted on said shaft and having depending sides arranged between said projections and said wheel, a snuffing cap carried by said member intermediate of the ends thereof to cover the wick, said member being shaped at its extreme free end to permit the locking thereof in place, a post at the other end of said top, a spring-pressed element mounted in said post and being substantially enclosed thereby, said element being arranged to be engaged and moved in one direction by the extreme shaped end of said member when said member is swung on its pivot to cap the wick and extinguish the light, and to move automatically in the other direction for engaging and locking said extreme shaped end of the member, and a spring coiled about the shaft to actuate said member to light the wick when said member is released from its locking engagement with said element.

JOHN HOLTZMAN.