Jan. 1, 1924 1.479,624

P. PABIAN

LIGHTER FOR CIGARS AND CIGARETTES

Filed Nov. 28, 1922

FIG. 1

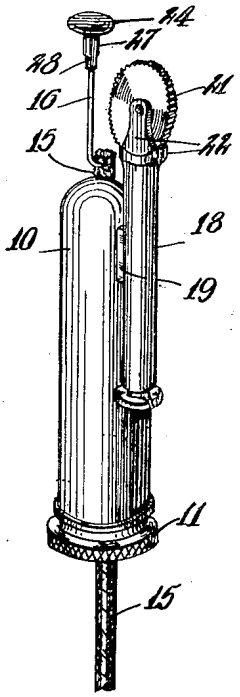


FIG. 2

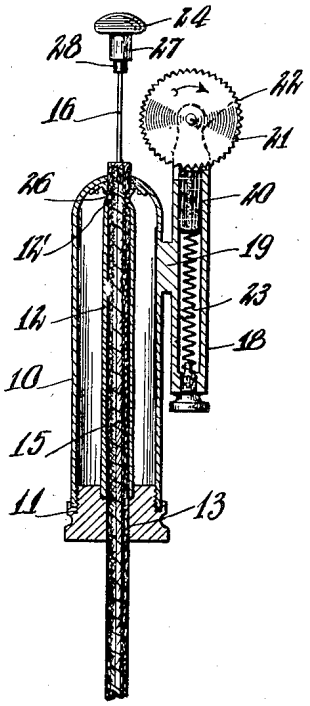


FIG. 3

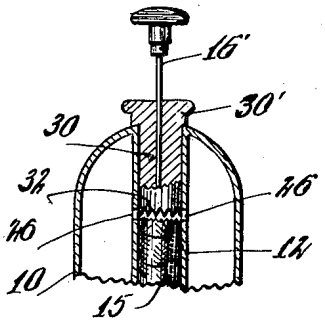


Inventor
Paul Pabian

By Soltan & Polachek
Attorney

Patented Jan. 1, 1924. 1,479,624

# UNITED STATES PATENT OFFICE.

PAUL PABIAN, OF TRENTON, NEW JERSEY.

## LIGHTER FOR CIGARS AND CIGARETTES.

Application filed November 28, 1922. Serial No. 603,739.

*To all whom it may concern:*

Be it known that I, PAUL PABIAN, a citizen of Poland, residing at Trenton, in the county of Mercer and State of New Jersey, have invented certain new and useful Improvements in Lighters for Cigars and Cigarettes, of which the following is a specification.

This invention relates to a lighter for cigars and cigarettes which may be carried around in the pocket of the user, rendering unnecessary the use of matches.

The invention has for an object to provide a simple form of lighter of this type which will be inexpensive to make, can be conveniently carried around in the pocket, and is efficient in operation.

For further comprehension of the invention, and of the objects and advantages thereof, reference will be had to the following description and accompanying drawings, and to the appended claims in which the various novel features of the invention are more particularly set forth.

Fig. 1 of the drawings is a perspective view of my improved cigar and cigarette lighter.

Fig. 2 is a central longitudinal sectional view thereof.

Fig. 3 is a fragmentary central longitudinal sectional view showing a modification.

In constructing my improved lighter I provide a cylindrical casing 10 which is closed at the lower end by a screw cap 11. Extending centrally through this casing is a tube 12 which is fixed at its upper end and to the top end of the casing and has a free, but snug, fit at its lower end in a recess formed in the cap 11, the latter having an opening 13 therethrough registering with the tube, while an opening is formed in the top of the casing which registers with the upper end of the tube, a liquid tight joint being provided at both these points.

Within this tube 12 a wick 15 is positioned, this wick being of a cross section corresponding to that of the tube and being of such length as may be desired, being preferably of somewhat greater length than the tube, so as to leave its lower end projecting. Engaged in the upper end of the wick 15 is a hook 16 by means of which the wick, which normally has its upper end concealed in the tube 12, may be exposed to the action of an igniting device.

This igniting device comprises a small cylinder 18 which is fixed to the casing 10 as indicated at 19 and has slidable therein a cylindrical block 20 of pyritic material whose upper end is pressed against the periphery of a toothed wheel 21 pivoted in ears such as 22 extending up from the cylinder 18, by means of an expansion spring 23 located in the cylinder. Upon the upper end of the hook is an enlarged head 24 which serves as a handle. It will be understood that the term pyritic is here used to designate any well known material from which sparks can be struck.

The tube 12 is formed with a contracted portion 12′ just below its upper end and is formed with a number of small apertures 26 at this contracted portion. Formed on the shank of the hook 16, just below the head 24, are enlargements 27 and 28 which are of a diameter to fit snugly, respectively in the upper of the tube 12 and in the contracted portion 12′.

The manner of use of my improved device is as follows: The casing 10 is filled with a suitable liquid such as alcohol. Normally, the upper end of the wick 15 is far enough within the tube 12 for the elements 27, 28 to be engaged in the top of the tube and close the openings 26. When the device is to be used the head is grasped and the wick pulled upwardly until the end thereof engages in the contracted tube part 12′. The device is then inverted and the liquid in the casing 10 is brought in contact with the end of the wick, through the openings 26, and dampens the wick. The device is then restored to upright position and the wick pulled upward until its end projects from the tube 12. The wheel 22 is then rotated in the direction indicated by the arrow, causing sparks to be thrown from the block 20 against the wick and igniting the latter. To extinguish the flame the lower end of the wick is grasped and the upper end drawn down into the tube 12.

In the modified construction shown in Fig. 3 the casing 10 and tube 12 are as above described except that the tube is not contracted at the point where the openings 26 are formed therein. Upon the shank 16′ of the hook is slidable a plug 30 which is of size to fit snugly in the tube 12 and has an enlarged upper end 30′ which limits its inward movement and serves as a handle whereby it may be grasped to be withdrawn. The lower end of this tube is formed with radial or transverse grooves or serrations

32, while the plug 30 is of a length to bring such lower end adjacent the openings 26 when the plug is in place in the tube 12.

In the use of this form of the device the wick 15 is first raised until its upper end engages the lower end of the plug 30, which latter may be kept in place by pressing inwardly thereon while the wick is being pulled. The device is then inverted, and some of the liquid in the casing 10 flows through the openings 26, along the grooves 32, and thus serves to dampen the wick. The device is then restored to upright position, the plug 30 is pulled out, and the wick drawn out and ignited as previously described.

Having thus described my invention what I claim as new and desire to protect by Letters Patent of the United States is as follows:

1. A device of the type described comprising a casing adapted to hold a combustible liquid, a tube extending completely through said casing, a wick inserted in said tube, said tube having a contracted portion near its upper end formed with on aperture, a hook attached to the wick, and a plug element carrier by the hook and adapted to fit in the said tube, and spark producing means mounted on said casing.

2. A device of the type described comprising a casing adapted to hold a combustible liquid, a tube extending completely through the said casing, a wick inserted in said tube, said tube having a contracted portion in its upper end formed with an aperture, a hook attached to the wick, a plug element carried by the hook and adapted to fit in the said tube and close the said aperture, and spark producing means carried by said casing.

3. A device of the class described comprising a casing adapted to hold a combustible liquid, a tube extending completely through said casing and having an aperture therein near its upper end, a wick inserted in said tube, a plug element slidable on said hook and adapted to fit in said tube with its lower end adjacent the said aperture, and spark producing means carried by said casing.

In testimony whereof I have affixed my signature.

PAUL PABIAN.